PROJECT 19: Design and Analysis of XNOR Gate by using Cadence Virtuoso

A Comprehensive Study of Analog Circuits

By: Priya Chaudhary, Astitva Johri and

Bhavya Solanki

Chapters:

List of Figures……..……. 3

1. Introduction …….. 4
2. Brief Description…… 5
3. Circuit Design……. 6-7
   3.1 Schematic Design……... 6
   3.2 Simulation Setup...…….. 6
   3.3 Running Simulation……... 6
   3.4 Analysis…….. 6
4. Simulation Results…….. 8
5. Advantages and Disadvantages…….. 9
   5.1 Advantages……. 9
   5.2 Disadvantages……. 9
6. Conclusion…….. 10
7. Frequently Asked Questions (FAQs)…….. 11

LIST OF FIGURES

Figure 3.1 Circuit of XNOR Gate……... 7

Figure 4.1 Simulation Results of XNOR Gate……... 8

1. INTRODUCTION

The design and analysis of an XNOR gate using Cadence Virtuoso involves creating a logic gate that outputs true when the number of true inputs is even. In Boolean logic, the XNOR gate is also referred to as an exclusive NOR gate, which is the complement of the XOR gate. The XNOR gate is essential in various digital systems, including error detection, parity checking, and various arithmetic operations. Using Cadence Virtuoso, a powerful design and simulation environment, one can efficiently design and analyze the XNOR gate at both schematic and layout levels.

The design flow in Cadence Virtuoso includes creating the logic circuit, performing simulations to verify the functionality, and analyzing its electrical characteristics such as power consumption, propagation delay, and output swing. The final goal is to optimize the design for performance, area, and power (PPA) and ensure the gate behaves as intended under various conditions.

2. BRIEF DESCRIPTION

An AND gate is a fundamental digital logic gate that outputs a high (logic 1) only when all its inputs are high (logic 1); otherwise, it outputs low (logic 0). In this design, we use **CMOS technology**, which combines **NMOS** and **PMOS** transistors to implement the AND gate. The CMOS approach ensures low power consumption and high performance, making it ideal for efficient digital circuits.

In **Cadence Virtuoso**, the AND gate is designed by connecting NMOS transistors in series and PMOS transistors in parallel. The schematic is created, followed by layout design and verification to meet design rules. Finally, the circuit is simulated to verify functionality, speed, and power consumption, ensuring the gate operates correctly under various conditions.

The design will focus on CMOS (Complementary Metal-OxideSemiconductor) technology due to its high performance, low power consumption, and scalability. The simulation results, including the verification of logical behavior, timing characteristics, and power consumption, will also be discussed. This process serves as a learning experience for both analog and digital circuit designers aiming to build efficient, reliable, and high-performance logic gates.

3. CIRCUIT DESIGN

3.1 Schematic Design

- **CMOS Configuration:**
  1. Use PMOS transistors in parallel for A. B and in series for $\overline{A} \cdot \overline{B}$.
  2. Use NMOS transistors in series for A. B and in parallel for $\overline{A} \cdot \overline{B}$.

3.2 Simulation Setup

- **Testbench:** Instantiate the XNOR gate and add pulse sources for inputs A and B.
- **Select Spectre Simulator:** Set for transient analysis with a suitable time range (e.g., 10 µs).

3.3 Running Simulation

- **Simulation Type:** Choose "Transient Analysis."
- **Time Parameters:** Define the simulation duration and step size.
- **Results:** Check the output waveform for the XNOR behavior:

$$Y=1 \text{ when } A=B,\ Y=0 \text{ when } A \neq B$$

3.4 Analysis

- Measure Propagation Delay and verify correctness by comparing with the truth table.
- Optionally, check power consumption.

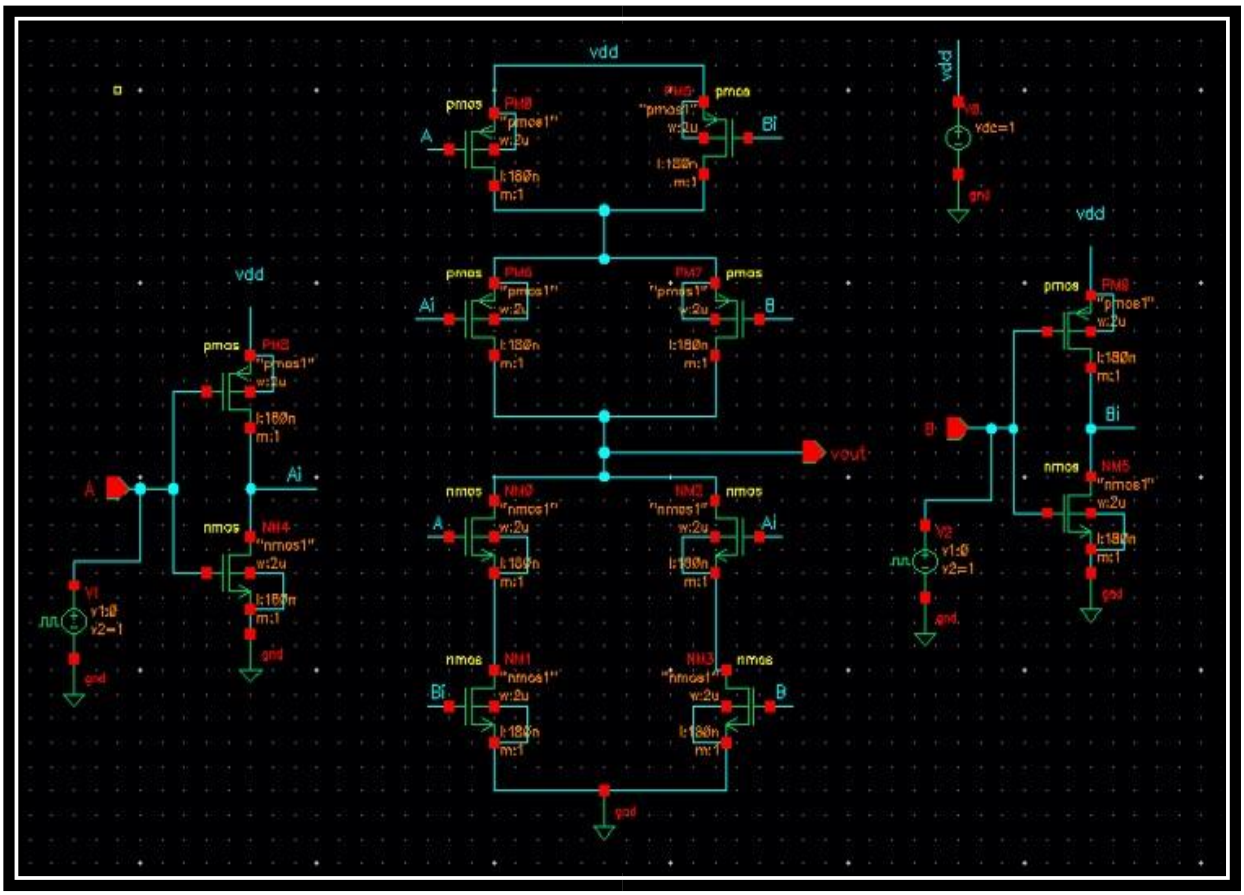

Figure 3.1 Circuit of XNOR Gate

4. SIMULATION RESULTS

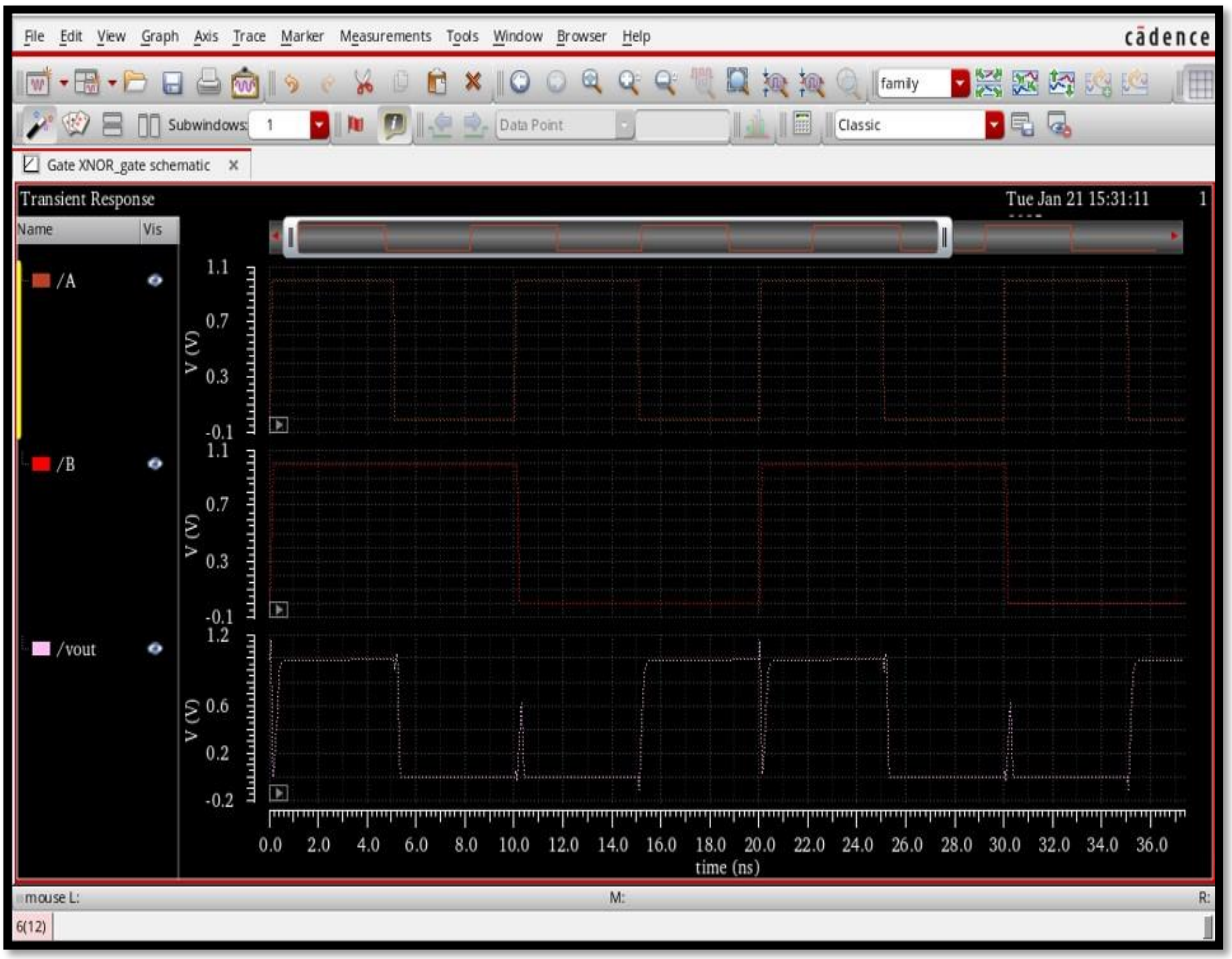

Figure 4.1: Simulation Results of XNOR Gate

5. ADVANTAGES AND DISADVANTAGES

5.1 Advantages:-

1. **Simplicity:** The XNOR gate has a straightforward Boolean function and is easy to implement using standard CMOS design techniques.
2. **Low Power Consumption:** When designed with proper sizing of transistors, the XNOR gate consumes minimal power, making it ideal for portable devices.
3. **Versatility:** The XNOR gate can be used in multiple applications such as arithmetic logic units (ALUs), error detection/correction circuits, and equality comparators.

5.2 Disadvantages:-

1. **Complexity in High-Speed Designs:** The XNOR gate may introduce delays in circuits requiring high-speed operations due to the presence of multiple transistors.
2. **Area Consumption:** Compared to basic gates like AND, OR, and NOT, the XNOR gate requires more transistors, which can increase the layout area in the chip.

6. CONCLUSION

The design and analysis of the XNOR gate using Cadence Virtuoso provide a comprehensive approach to creating and optimizing digital logic circuits. By leveraging Cadence Virtuoso's powerful design and simulation tools, engineers can ensure that their XNOR gate design meets the desired specifications for performance, power, and area. The entire process—from schematic creation to layout design and post-layout simulation—ensures that the XNOR gate functions as intended, is efficient in terms of power consumption, and operates reliably under various conditions.

The transient analysis allows for the observation of real-time changes in the output based on input signal variations, ensuring that the gate behaves according to the Boolean function for all combinations of inputs.

The layout design and verification process (including DRC and LVS checks) guarantees that the physical design adheres to the rules required for successful fabrication, ensuring that the circuit will perform as expected when it is manufactured.

In conclusion, the entire flow—from design to verification—using Cadence Virtuoso provides a highly efficient and accurate method for designing complex logic gates like the XNOR gate. The design process not only ensures functionality but also optimizes the gate for real-world applications where speed, power, and area are crucial factors. With the increasing demand for energy-efficient and high-performance digital circuits, tools like Cadence Virtuoso are indispensable for the design and optimization of modern logic circuits.

7. FREQUENTLY ASKED QUESTIONS (FAQs)

Q1. What is the function of an XNOR gate?
Answer: An XNOR gate (exclusive NOR) outputs true (1) if the number of true inputs is even, i.e., when both inputs are the same.

Q2. Can I use Cadence Virtuoso for digital designs?
Answer: While Cadence Virtuoso is primarily used for analog and mixedsignal designs, it can also be used for custom digital designs like your XNOR gate. However, for larger-scale digital designs, other tools like Vivado or Quartus may be more suitable.

Q3. How do I verify my XNOR gate design?
Answer: You can verify your XNOR gate design by running simulations such as transient analysis in Spectre or ADE. Additionally, ensure the layout is correct by running DRC (Design Rule Checks) and LVS (Layout Versus Schematic) checks to verify the physical layout against the schematic.

Q4. What is the propagation delay of my XNOR gate?
Answer: Propagation delay is the time it takes for the output to change after the inputs have changed. You can measure this during the transient simulation by observing the time difference between the input change and the output response.

Q5. How can I optimize power consumption in my XNOR gate design?
Answer: Power consumption can be optimized by reducing the size of transistors, optimizing the layout for minimal capacitance, and using techniques such as dynamic voltage scaling or using lower-power transistors.